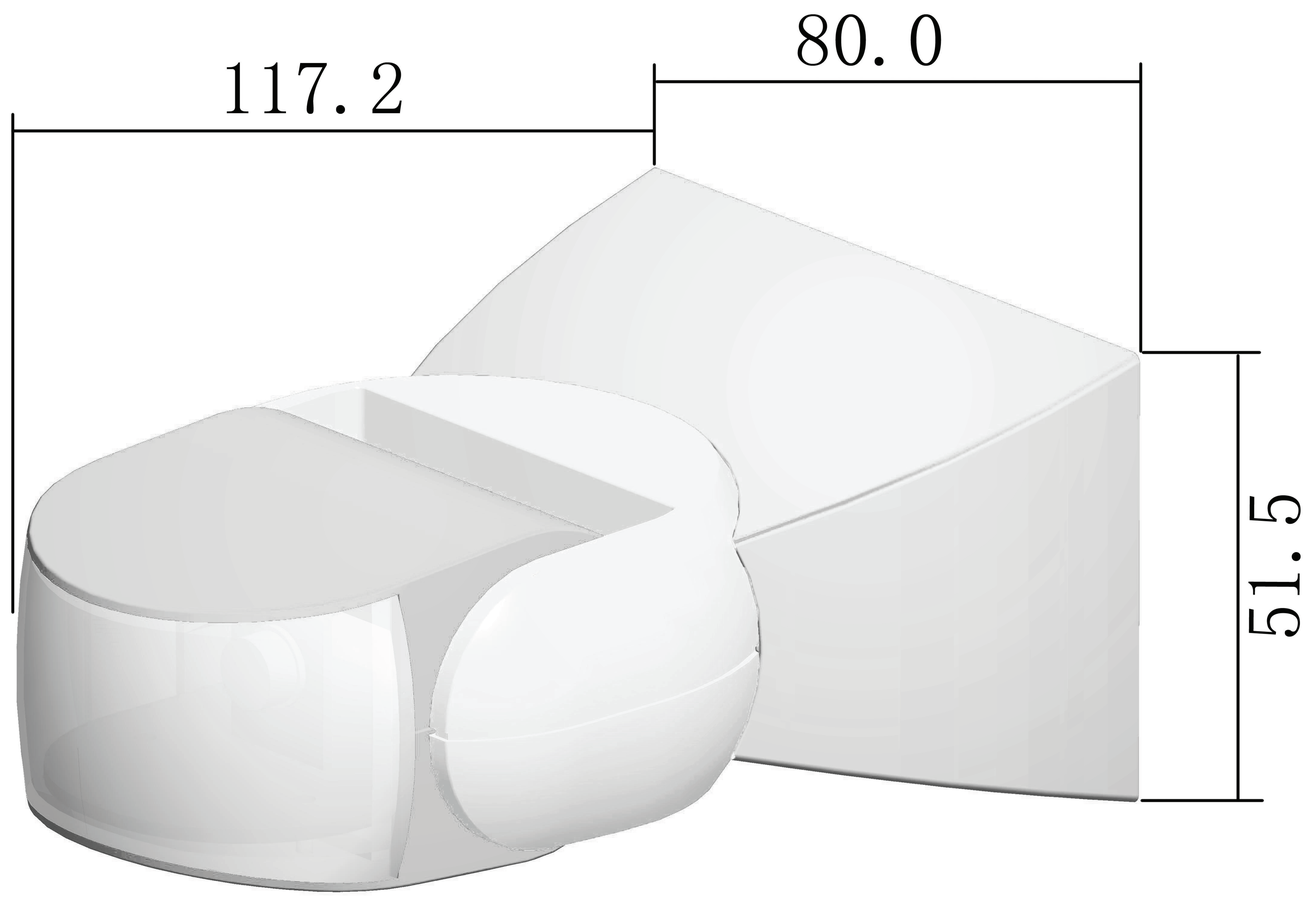
117.2
80.0
51.5